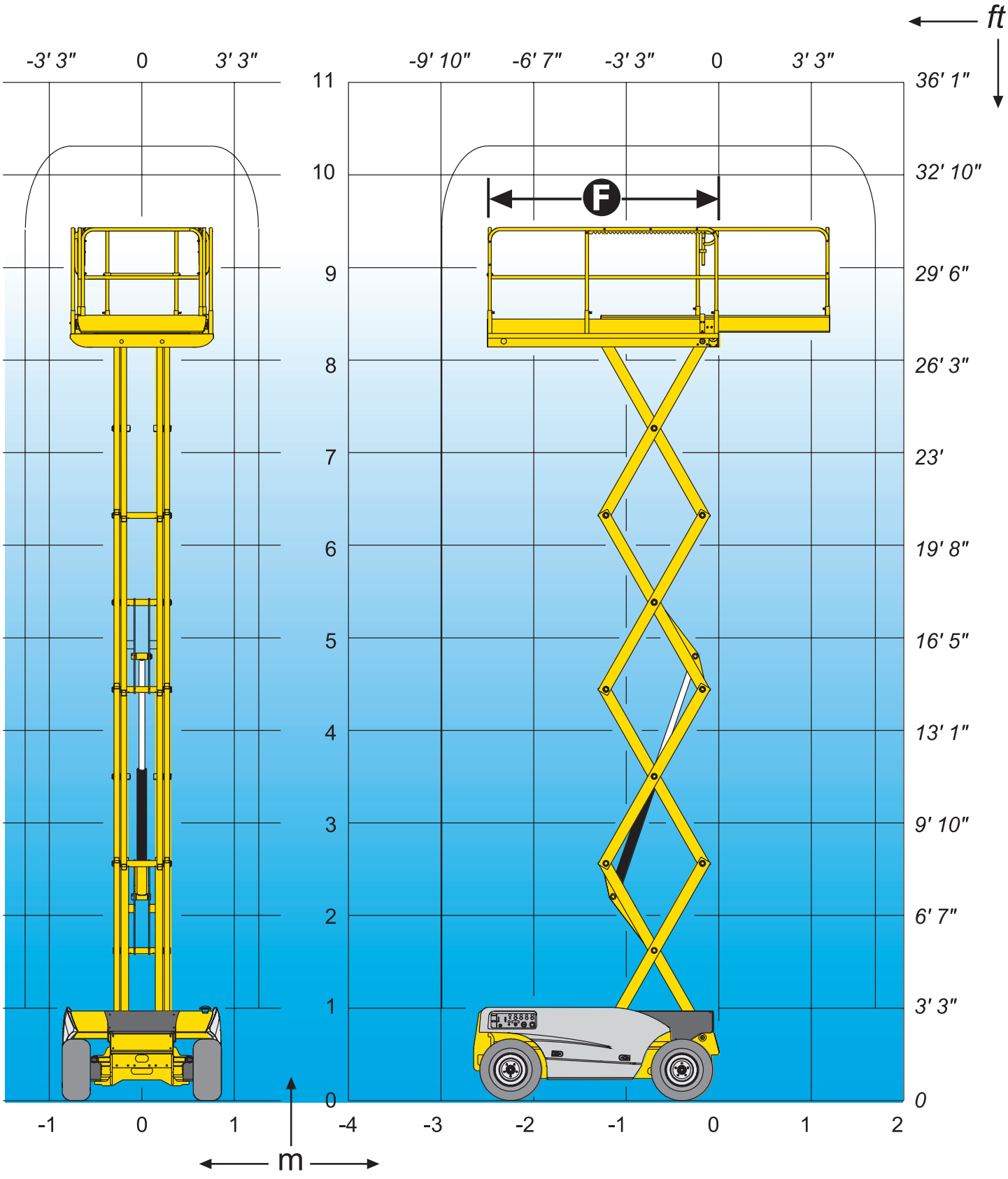Compact 10 DX